DEZY: Deep Autoencoder Mixture Model for Identifying Irregular Genes in RNA-seq Data

S.B. Belhaouari, R.H.M. Amin, K. A. Elmagarmid, A. Al Qahtani and H. Bensmail

جامعة حمد بن خليفة
HAMAD BIN KHALIFA UNIVERSITY
عضو في مؤسسة قطر
Member of Qatar Foundation

Motivation

Aim. We explore the application of a Deep Autoencoding Gaussian Mixture Model for identifying aberrant genes in RNA sequencing data.

Why and how :

- Extracting insight from the enormous quantity of RNA-seq data
- Identification of a small number of collective genes/samples corresponding low -dimensional free-energy landscape retains the essential information of the underlying system.
- Variational autoencoders ensure continuity of the embedding by assuming a unimodal Gaussian prior, this is at odds with the multi-basin free-energy.
- landscapes that typically arise from the identification of meaningful collective variables

Introduction and terms

- aiming to advance the understanding of Mendelian disease through genomics.
- detection of aberrant genes is crucial for deciphering the genetic
- foundations of gene disorder utilizing aberrant gene methylation is a molecular marker system in several cancer.
- identifying mutations and subsequently triggering outputs that inhibit aberrant disease phenotypes.

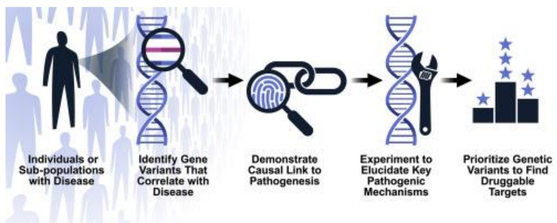

Architecture

Determination of Cluster Labels and Thresholding Scheme

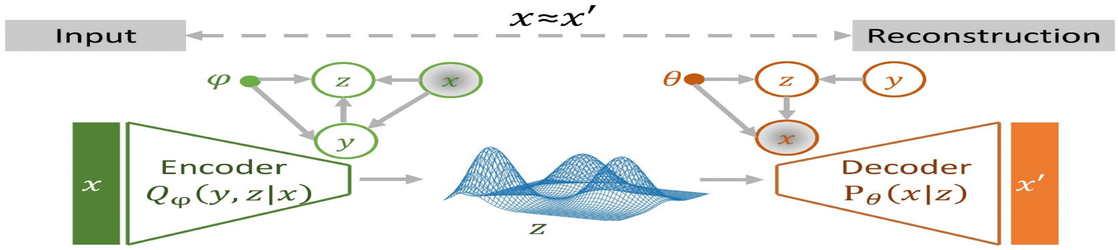

$$\mathcal{L}(\theta,\phi;x) = \mathbb{E}_{Q_\phi(y,z|x)}\left[\log P_\theta(x,y,z) - \log Q_\phi(y,z|x)\right]$$

$$\mathcal{L}(\theta,\phi;x) = \mathbb{E}_{Q_\phi(y,z|x)}\left[\underbrace{\log \frac{P(y)}{Q_\phi(y|x)}}_{\text{Entropy}} + \underbrace{\log \frac{P_\theta(z|y)}{Q_\phi(z|x,y)}}_{\text{Regularization}} + \underbrace{\log P_\theta(x|z)}_{\text{Reconstruction}}\right]$$

Dezy Architecture and Training Hyperparameters

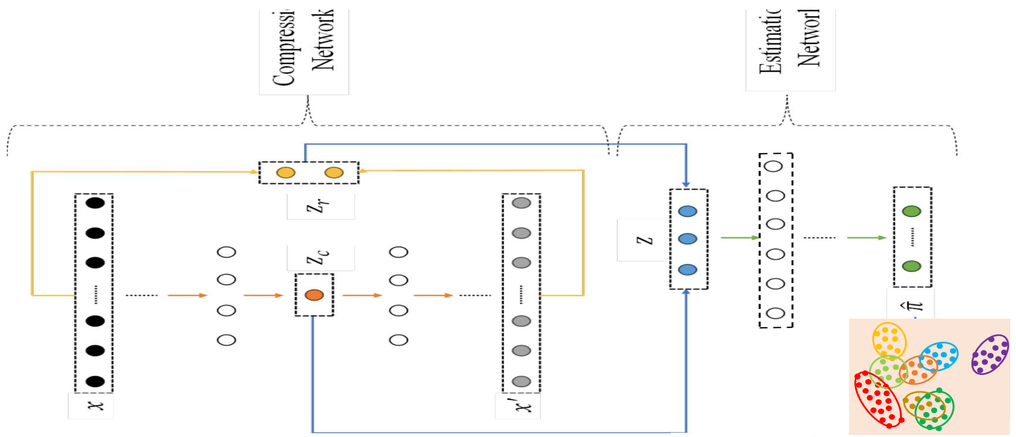

$$\mathcal{L}(\mathbf{x},\theta) = \frac{1}{N}\sum_{i=1}^{N}\mathbf{L}(\mathbf{x}_i,\mathbf{x}'_i) + \frac{\lambda_1}{N}\sum_{i=1}^{N}\mathbf{E}(\mathbf{z}_i) + \lambda_2 P(\hat{\Sigma})$$

$$\mathbf{E}(\mathbf{z}) = -\log\left(\sum_{k=1}^{K}\hat{\pi}_k \frac{-\frac{1}{2}\exp(\mathbf{z}-\hat{\mu}_k)^T\hat{\Sigma}_k^{-1}(\mathbf{z}-\hat{\mu}_k)}{\sqrt{|2\hat{\pi}_k\hat{\Sigma}_k|}}\right)$$

Energy-Based Anomaly Detection

1. Experiment 1: Utilizing a one-dimensional latent space with Pearson and relative distances.
2. Experiment 2: Employing the same setup as Experiment 1, but with three distances.
3. Experiment 3: Employing a two-dimensional latent space with Pearson and relative distances.
4. Experiment 4: Utilizing the same setup as Experiment 3, but with all three distances

Clustering-Based Anomaly Detection

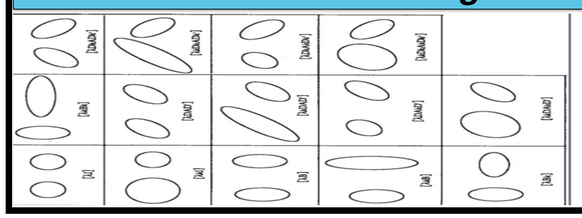

Model	EM	Dist	Vol	Shape	Orient
λI	•	Spherical	equal	equal	NA
$\lambda_k I$	•	Spherical	variable	equal	NA
λDAD^t	•	Ellipsoidal	equal	equal	equal
$\lambda_k DAD^t$	•	Ellipsoidal	variable	equal	equal
$\lambda D_k AD_k^t$	•	Ellipsoidal	equal	equal	variable
$\lambda_k D_k AD_k^t$	•	Ellipsoidal	variable	equal	variable
$\lambda_k D_k A_k D_k^t$	•	Ellipsoidal	variable	variable	variable

Results

Table 10. Strategy (i, j) where we use an i-dimensional latent space and j distances. We have $i = \{1,2,3,4\}$ and $j = \{2,3\}$. We have $2^3 = 8$ possibilities. The optimal number of components is described by $k = \{1,\ldots,9\}$ using both AIC and BIC model selection criteria.

Design	Strategy	K	# Aberrant Genes	Gene Distribution
Experiment 1	(2, 3)	7	3+2	{MGST1, ALDH18A1, MCOLN1} {TIMMDC1, CLPP}
Experiment 2	(1, 3)	2	4+1	{MGST1, ALDH18A1, MCOLN1, CLPP} {TIMMDC1}
Experiment 3	(1, 2)	3	3+1+1	{MGST1, ALDH18A1, MCOLN1} {TIMMDC1} {CLPP}
Experiment 4	(2, 2)	4	5	all
Experiment 5	(3, 2)	5	5	all
Experiment 6	(3, 3)	6	3+2	{MGST1, ALDH18A1, MCOLN1} {TIMMDC1, CLPP}
Experiment 7	(4, 2)	8	2+2+1	{ALDH18A1, TIMMDC1} {MGST1, MCOLN1} {CLPP}
Experiment 8	(4, 3)	9	3+2	{TIMMDC1, MCOLN1, ALDH18A1} {MGST1, CLPP}

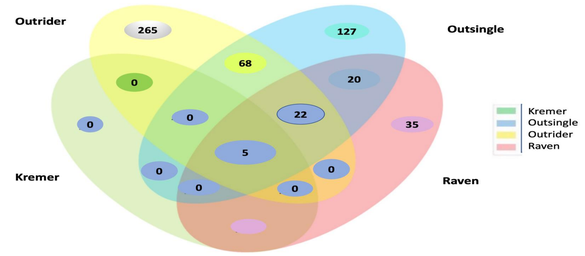

- Raven succeeded in grouping most of the known anomalies (MGST1, ALDH18A1, MCOLN1) into a small cluster.
- We obtain a good grouping when the optimal of clusters is large and below 10.
- A better result was achieved for all the aberrant genes where MGST1, ALDH18A1, MCOLN1, TIMMDC1 and CLPP have been successfully grouped in one Cluster.

References

- Cummings, et al. Science Translational Medicine, 9(386):.
- Kremer et al. (2017). Nature Communications
- Salkovic, et al. I2023). Bioinformatics.
- Bozkurt et al. Machine Leaning: Science and Technology.